Conceptual Design

Davide Manca

Lesson 2 of "Process Systems Engineering" – Master Degree in Chemical Engineering – Politecnico di Milano

Introduction

The purpose of engineering is to create new material wealth.

We attempt to accomplish this goal in chemical engineering via the chemical (or biological) transformation and/or separation of materials.

Process and plant design is the creative activity whereby we generate ideas and then translate them into equipment and processes for producing new materials or for significantly upgrading the value of existing materials.

J. M. Douglas, 1988

Introduction

The purpose of engineering is to create new material wealth.

How?

- Developing new processes;
  - At the **research** stage, 1-3% of new ideas are commercially feasible;
  - At the **development** stage, 10-25% of new ideas are commercially feasible;
  - At the **pilot plant** stage, 40-60% of new ideas are commercially feasible;
- Modifying existing plants;
- Optimizing existing plants.

During its service life a plant is not static and unchangeable.

The ongoing evolutions of market demand may call for changing the **specifications** and the **quality** of **products**.
Consequence → It is necessary to find the optimal operating conditions of the plant so to achieve the maximum profit.

Conceptual Design: Hierarchical Approach

Process synthesis is quite challenging since there are a very large number (10^4 to 10^9) of alternatives that can be considered to accomplish the same goal.

To define an optimal layout, it is necessary to follow some economic guidelines subject to process constraints, environmental safety, and sustainability.

This is a hierarchical approach that progressively goes in-depth and produces results that are more accurate by increasing the investigation detail.

Hierarchy of decisions

1. Batch vs Continuous;
2. Input-Output structure of the flowsheet;
3. Recycle structure of the flowsheet;
4. General structure of the separation system;
5. Heat Exchange Networks

Input data

Necessary information for the design of a new process or a new plant:

1. Reactions and operating conditions;
2. Production rate;
3. Product purity → information on price/purity;
4. Raw materials → information on price/purity;
5. Reaction rate and catalyst deactivation;
6. Process constraints;
7. Information on the plant and its location;
8. Physical property data of compounds → databases;
9. Safety, toxicity, environmental impact of materials;
10. Equipment cost, price/cost of products, byproducts and utilities.

Chemical and physical data

1. Stoichiometry of reactions;
2. Temperature and pressure ranges of the reactions;
3. Reaction phases → Solid, liquid, gaseous;
4. Product distribution for a given conversion;
5. Information about conversion and selectivity;
6. Data on conversion as a function of residence time;
7. Detailed information on the catalyst;
8. Any “runaway reactions” and unwanted reactions (to identify the *top events*).

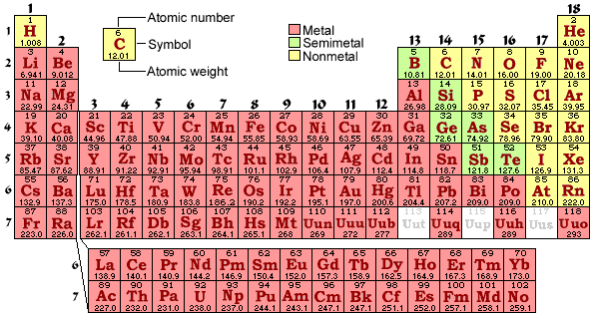

Once the data collection is finalized, it is recommended to perform a **sensitivity analysis** for each variable, in order to identify the variables that have a significant influence on the flowsheet and/or on the plant management.

Level-1 decision

- Capacity greater than **5000 ton/y** → Continuous plant;
- Capacity less than **500 ton/y** → Batch plant.

N.B.: This subdivision is indicative.

Why a Batch?

- It allows carrying out several unit operations without changing the process unit (*i.e.* heating reactants, reaction, product quench, separation from waste products or byproducts).
- It is usually easier and more flexible. It is necessary for different productions with the same equipment (dyes, drugs), for seasonal production (fertilizers) or for products with short commercial life (organic pigments).
- Required if the process reactions are extremely slow.
- Necessary when fouling of the equipment plays a major role.

Level-2: input-output structure of the flowsheet

The importance of the input-output structure of a flowsheet is related to the purchase of raw materials; in fact they cover 30-80% of the overall cost of the process.

N.B.: to avoid any losses, the unreacted reactants have to be separated, recovered and recycled. It is suitable to recover more than 99% of the valuable compounds.
At level-2, calculations are simplified by switching the request from 99% to 100%.

N.B.: for the gaseous reactants with traces of inert and for gaseous byproducts it is necessary to provide a **purge** before recycling, in order to avoid the accumulation of components that could affect the correct operation of the plant.

Flowsheet alternatives

- **Without purge**

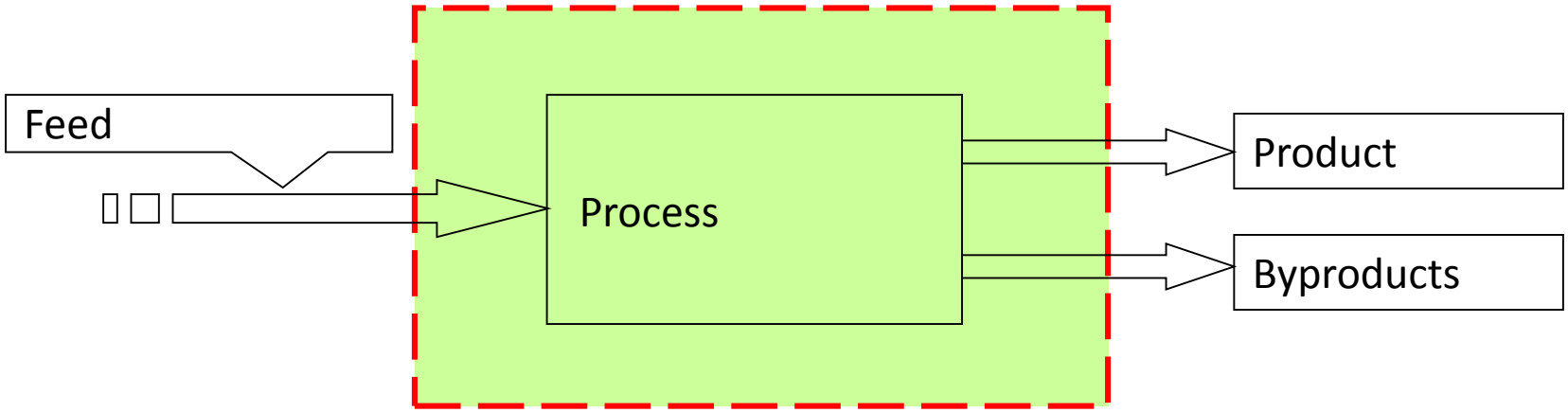

- **With purge**

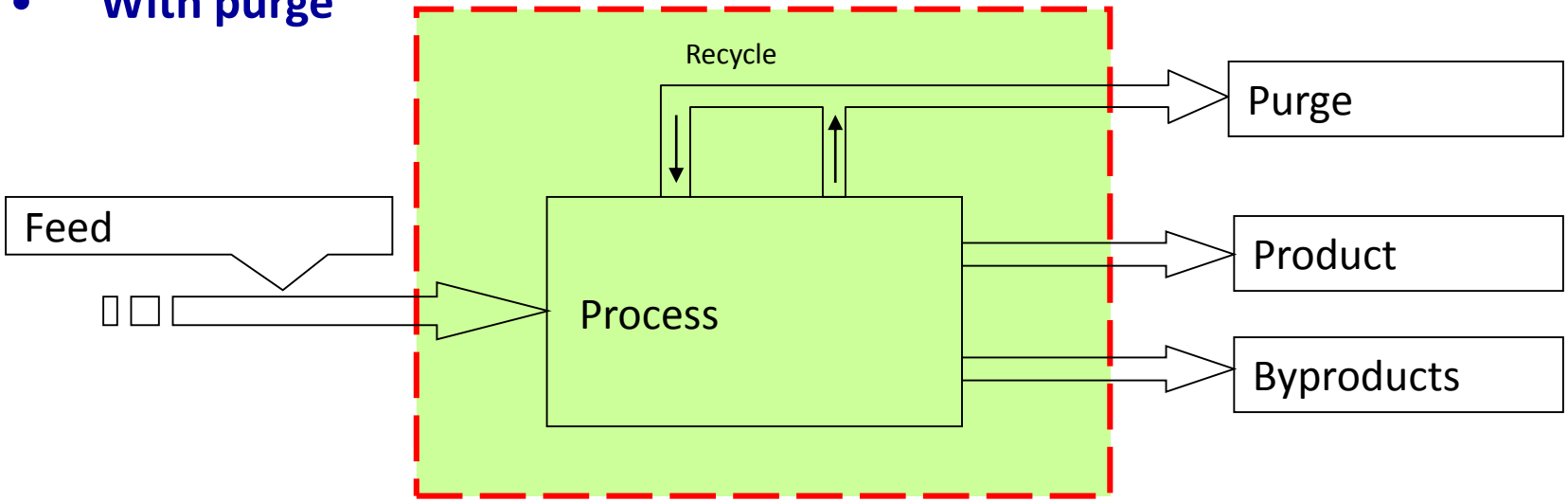

Level-2 decisions

The decisions to be taken at level-2 are:

1. Should we purify the feed streams before they enter the process?
2. Should we remove or recycle a byproduct?
3. Should we use a gas recycle and purge stream?
4. Should we neglect to recover and recycle some reactants?
5. How many product streams will there be?
6. What are the design variables for the input-output structure?
7. What economic trade-offs are associated with these variables?

N.B.: in case of a byproduct produced by a reversible reaction (*e.g.*, component *S*), it is possible to recycle it to the reactor until it eventually reaches the equilibrium level. Consequently, the recycled byproduct *S* would decompose at the same rate as it is produced. In this case, selectivity would not be affected. Obviously, we would have to oversize all the process units belonging to the recycle taxonomy to accommodate the increased stream flowrates due to the achievement of the equilibrium conditions.

Design guidelines for level-2

- If a feed impurity is not inert and/or is present in significant quantities ➔ REMOVE IT
- If a feed impurity is present in a gas feed ➔ PROCESS IT
- If a feed impurity in a liquid feed stream is also a byproduct or a product component ➔ REMOVE IT
- If a feed impurity is present in large amounts ➔ REMOVE IT
- If a feed impurity is present as an azeotrope ➔ PROCESS IT
- If a feed impurity is easy to separate from the product ➔ PROCESS IT
- If a feed impurity is a catalyst poison ➔ REMOVE IT

N.B.: A LIGHT COMPONENT is defined as the component whose $T_{eb,n}$ is lower than that of propylene (–48 °C) ➔ Cooling costs are very high.

N.B.: Reactants such as water and air have negligible costs, however we must consider the costs related to their purification (regulated by the law in terms of environmental emissions).

Classification of the process streams

At level-2, it is recommended sorting and classifying the streams into categories so to achieve a better readability of the process. Each flow should be identified by T, P, flow rate and composition, in ascending order of $T_{eb,n}$.

1. Purge → gaseous byproducts;
   → feed impurities;
   → gaseous reactants not recovered and recycled.
2. Recycle and purge;
3. Recycle;
4. Main Product;
5. Byproducts;
6. Byproducts not sold but used as fuel;
7. Waste.

Material balances and design variables

The degrees of freedom must be specified to evaluate the mass balances. Usually, these degrees of freedom correspond to design variables such as:

- Conversion;
- T and P of the reaction;
- Molar ratios of reactants;
- Excess reactants;
- Recycle and Purge.

Once these degrees of freedom have been defined/assigned, it is possible to write the mass balances of the process.

$$Acc = (In\text{-}Out) + Prod \qquad [kg/h, t/d, \ldots]$$

We can now associate an economic value to every stream.

$$Acc = (Incomes\text{-}Expenses) + Earnings \qquad [€/h, \$/d, \ldots]$$

Note that both mass and economic balances are a function of the degrees of freedom.

Solution methodology

To solve the material balances it is recommended to adopt the following steps:

1. Assign the required production;
2. From the stoichiometry and from point 1 (or from the products distribution) we evaluate the flowrates of reactants and byproducts as a function of the design variables;
3. As the impurities in the feeds are known, we evaluate the inlet/outlet flowrates of inert(s) from the process;
4. If the process is working in non-stoichiometric conditions or the reactant(s) is present in the purge, it is necessary to take into account the amount of reactant in excess that has been fed (and lost in the process) and recalculate the inlet/outlet flow rates.

It is now possible to build the molar (or massive) flow rate matrix for all the components in the process:

$$\mathbf{F} = \{F_{ij}\} \qquad i=1,\ldots, N_{compounds} \quad j=1,\ldots, N_{streams}$$

Level-2 economic potential

EP_2 = (Products Price + Byproducts Value) – (Raw Materials Cost) [€/y]

As far as the byproducts are concerned, it is necessary to distinguish whether they are sold to the market value or used within the process (for example as fuel for the utilities of the plant).

The economic assessment of Level-2 takes into account <u>only</u> the Input and Output streams. Any internal and recycle streams are neglected.

Level-3 decisions

To get a more detailed analysis of the process under design and achieve an improved economic assessment, it is necessary to consider the structure of the recycle streams. This step quantifies the economic load of reactor(s) and when applicable of compressor(s) (economically very expensive). The separation system is still considered as a black-box. The decisions to be taken are:

1. How many reactors should be designed? In case of two or more reactors in series, is it necessary to provide an intermediate separation system among them?
2. How many recycles are there?
3. Any reactor should be supplied with some excess reactant?
4. Is a compressor required? How much does it cost (**CAPEX** and **OPEX**)?
5. Does the reactor run adiabatically, with direct heating/cooling or by indirect heat exchange through a heat transfer fluid?
6. Should we shift the equilibrium conversion and how?
7. How much does the reactor impact on the economy of the process?

Level-3 decisions

Regarding the recycle streams, it is necessary to base the decision on their phase. If the recycle is **gaseous**, a compressor is **always** necessary. If the phase is **liquid**, then a pump is required and its cost is usually negligible.

In general, using an excess reactant can improve the selectivity or shift the equilibrium (law of mass action), but at the same time it increases the recycle flowrate and consequently the compression/pump cost. Therefore, there is an optimal excess of reactant to be determined in terms of molar ratios.

In case of byproducts from a reverse reaction, once the stationary conditions are reached, their concentration is constant and a function of K_{eq}.

$$2\,A \leftrightarrow B + C \text{ (byproduct)} \qquad K_{eq} = \frac{[B]\,[C]}{[A]^2}$$

From which we obtain [C]. Example of secondary reaction: $2\,C_6H_6 \rightarrow C_{12}H_{10} + H_2$

Energy balances for the reactor

In order to verify the hypothesis of adiabatic-reaction process, it is necessary to evaluate the heat of reaction released or absorbed.

$$\text{Heat of reaction} = Q_{reac} = \Delta H_{reac} \cdot F_{feed,fresh}$$

Once Q_{reac} is known, it is possible to determine T_{out} by assuming that the process is working under adiabatic conditions, which implies the absence of heat losses.

N.B.:

- $c_{p,mix}$ changes with the evolution of the reaction;
- the molar flow rate is not always constant.

If case of indirect heat exchange, the following maximum values apply when designing the heat exchanger:

- $U_{gas} \cong 100$ W/m^2 K (for high temperature, gaseous phase reactions);
- $A_{max} \cong 550\text{-}750$ m^2;
- $Q_{max} \cong 2$ MW.

Energy balances for the reactor

- If a heat exchanger does not meet the energy requirements of the process, it is recommended to use a heat transfer fluid that interacts directly with the reaction environment (with the consequent problems linked to its separation and re-use).
- Often, the inert works as thermal diluent that maintains the temperature within a suitable range (for instance, in case of steam cracking pressurized water vapor is used). In some cases the heat transfer fluid has also a function related to the law of mass by shifting the reaction equilibrium.
- Whenever a recycle gaseous stream is needed, it is necessary to compress it to recover the pressure drops.
- If a compressor is required (preferably a multistage unit with intermediate cooling) we need to prevent any condensation and, if that happens, we have to remove the liquid phase condensed in the cooling stages to overcome possible troubles associated with unbalanced rotor, vibrations, and erosion of the blades.

Reactor design

There are some empirical guidelines (see Levenspiel in Chemical Reaction Engineering) proposing the reactor configuration, distinguishing between CSTR and PFR, depending on whether it has anything to do with:

- Reactions → Single / Multiple
- Reactions → Isothermal / Adiabatic
- Reactions → In parallel / In series

Level-3 economic potential

- Once the recycles have been quantified, it is possible to evaluate the CAPEX and OPEX terms of the reactor and the compressor.
- Even if the reactor runs adiabatically, nonetheless it has some operating costs due to the maintenance costs and the presence of field operators.

- The compressor is characterized by very high CAPEX and OPEX terms.
- At this stage of the process design, it is possible to identify the first optimal values of conversion and composition of the purge. These values are far from being the absolute optimum values as the separation process and the heat exchangers network have not been designed yet.

N.B.: The higher the design detail is, the more the working field narrows and the research undertaken at the next level becomes easier.

Level-3 economic potential

The economic potential at level-3 is evaluated by subtracting from level-2 the two main pieces of equipment dimensioned so far: the reactor and the compressor (if any).

$$EP_3 = EP_2 - \text{Reactor and compressor costs (CAPEX + OPEX)} \quad [€/y]$$

N.B.: by increasing the economic potential ($EP_2 \rightarrow EP_3 \rightarrow EP_4$) their value decreases monotonously. If during the process design an economic potential becomes too low or even negative one can stop the procedure without going any further.

N.B.: as soon as an economic potential assumes a value that is no more economically feasible/viable, any further investigation would only worsen the economic value and therefore should be avoided.

Level-4 decisions

Level-4 of process design focuses on the separation system.

$$EP_4 = EP_3 - \text{Separation costs (CAPEX + OPEX)} \quad [€/y]$$

To establish the general structure of the separation system, we first determine the phase of the reactor effluent stream.

- If **LIQUID** we only need a liquid separation system
- If **VAPOR**
  - Partial or complete condensation through cooling;
  - Condensation by compression;
  - Condensation by cryogenic cooling;
  - Vapor separation system.

The separation system

- If **LIQUID + VAPOR**:

  - The reactor can be used as a phase separator;
  - One can introduce a flash after the reactor;
  - If the vapor temperature is greater than the $T_{cooling}$ of the water (~ 35 °C), then it is cooled to 35 °C and the phase separation is performed;
  - If there is a lot of reactant inside the liquid, this must be recycled to the reactor;
  - If the obtained liquid contains mainly products, it must be sent to the separation system;
  - The vapor stream from the flash is typically sent to the vapor separation system;
  - If the vapor content is low, it is sent to the separation system together with the liquid stream.

Liquid effluent from the reactor

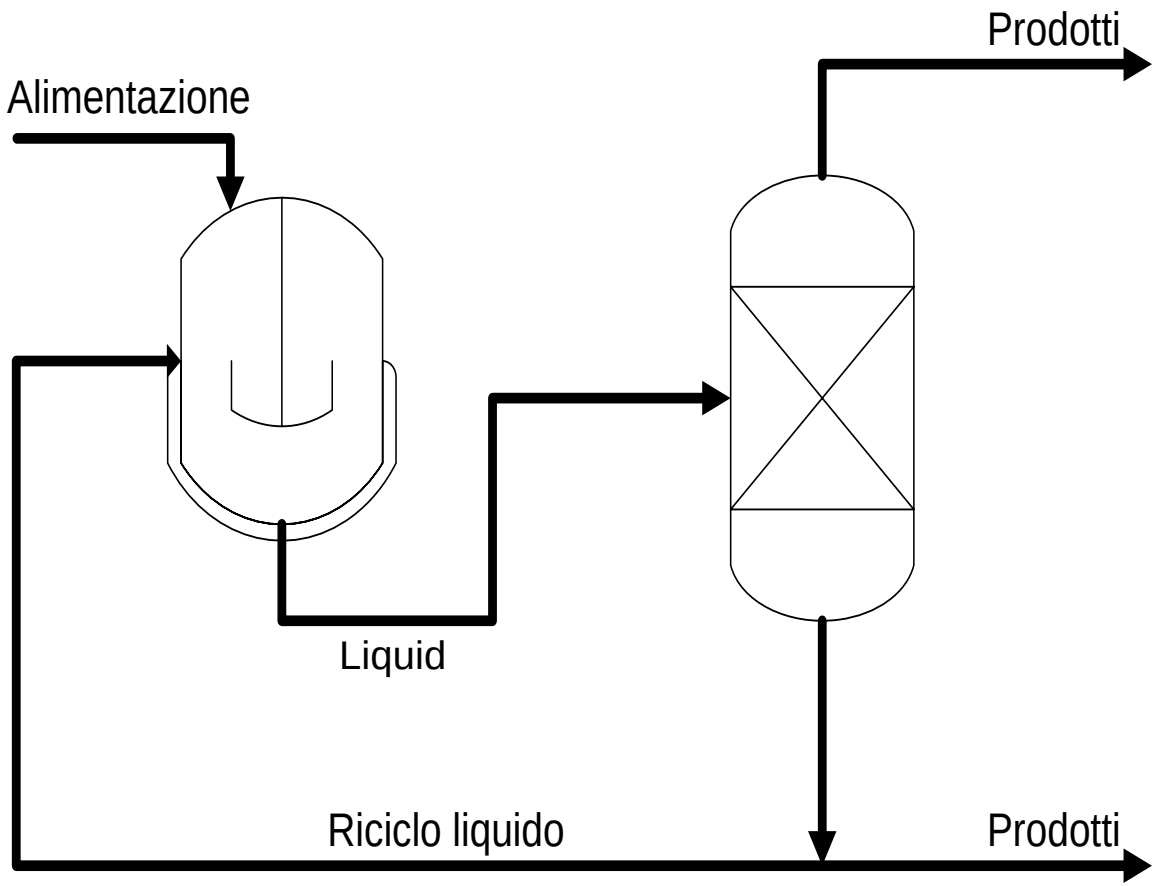

Liquid and vapor effluent from the reactor

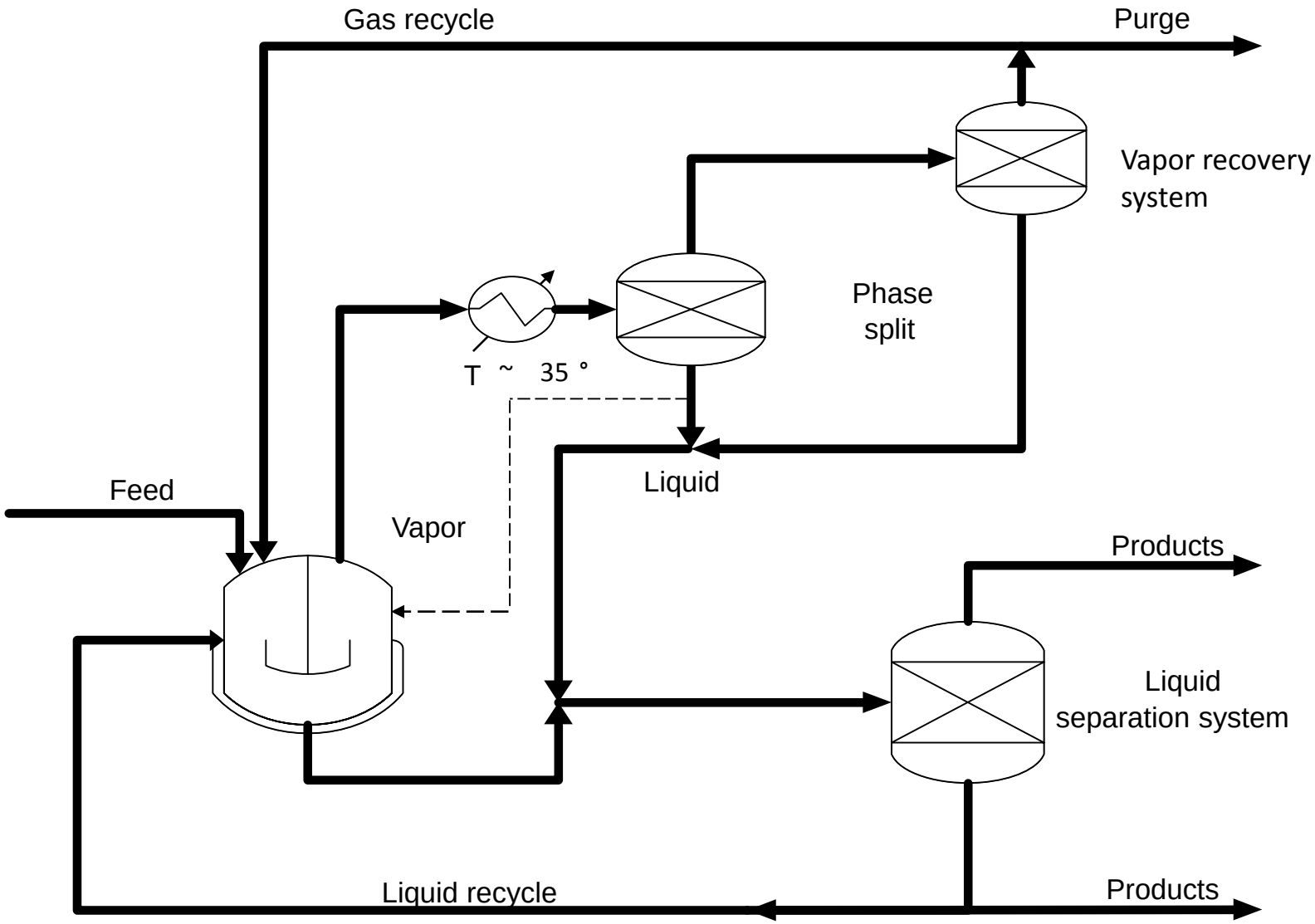

Vapor effluent from the reactor

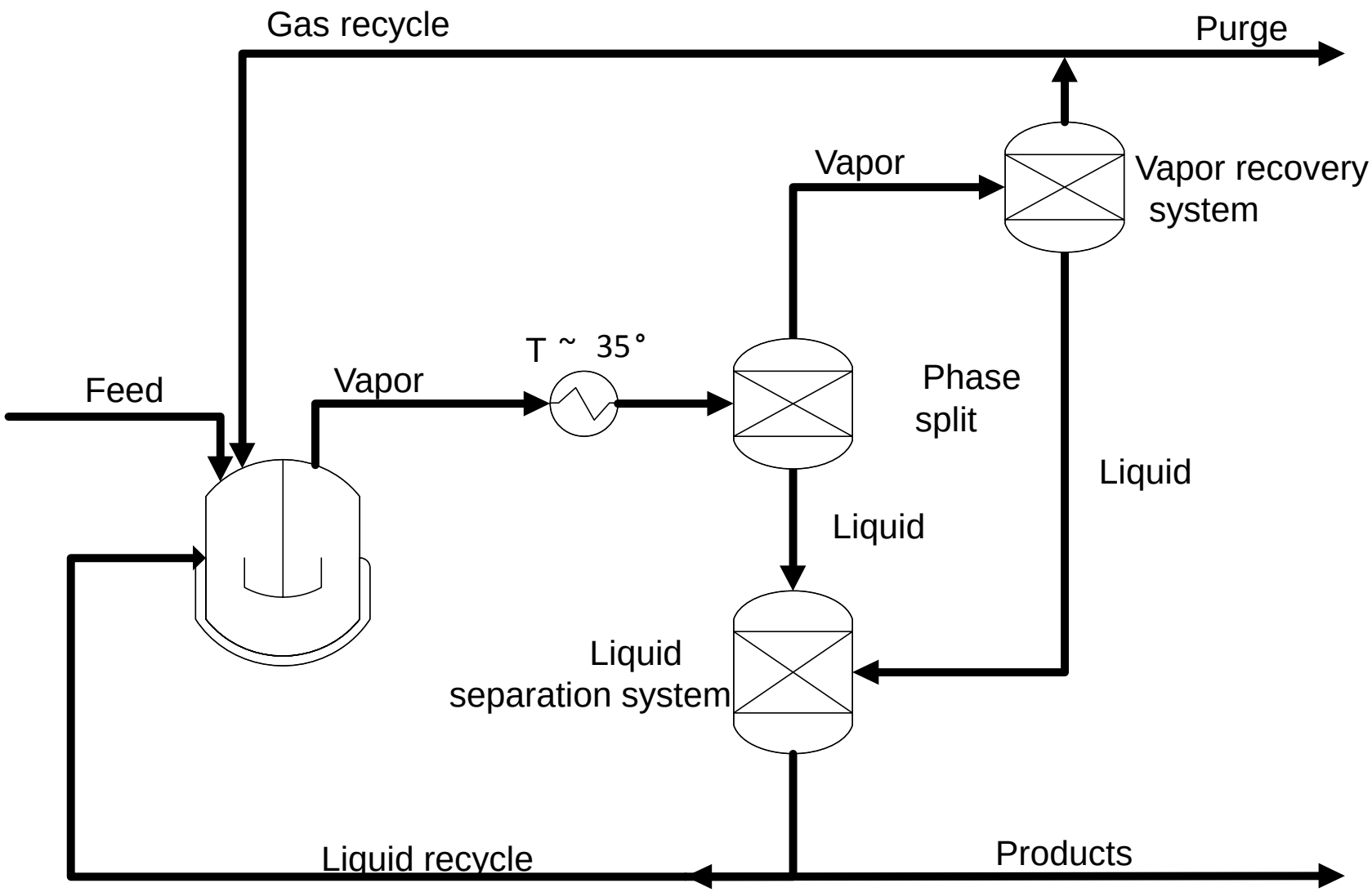

Positioning the vapor recovery system

There are four choices:

1. Purge stream: if significant amounts of valuable materials are being lost ➔ **A**.
2. Gas recycle stream: if some materials are deleterious to the reactor operation (catalyst poisoning) ➔ **B**.
3. Flash vapor stream: if both items 1 and 2 are valid ➔ **C**.
4. None: if neither point 1 nor point 2 occur.

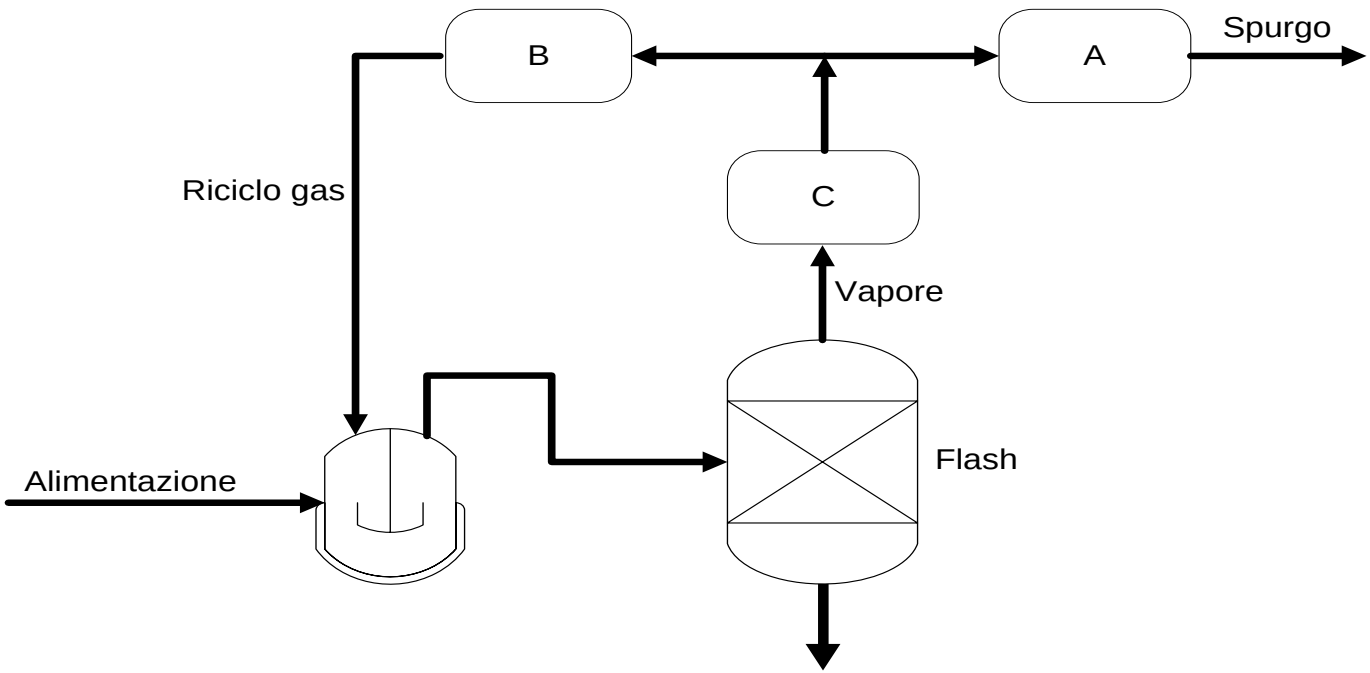

The vapor recovery system

The most common choices for the **VAPOR** recovery system are:

- Condensation: high pressure or low temperature, or both;
- Absorption: a separation system for the solvent must be provided;
- Adsorption
- Membrane separation process (Monsanto: Prism);
- Reaction systems (for example: CO_2 removal from gas streams;

  H_2S removal with amines, removing pollutants through combustion)

N.B.: a column preceded by a flash has normally a diameter that is significantly lower compared to a system without any phase separation systems.
In fact, by using the liquid stream that leaves the flash drum as the feed to the column there will be much less vapor "traffic" inside the column and, consequently, the size of the column will be smaller.
However, the presence of the flash drum requires a vapor separation system and this increases considerably the economic costs of the purification train.

The liquid separation system

The decisions to be taken at this stage are:

1. How should light ends be removed if they contaminate the product?
2. What should be the destination of light ends?
3. Should we recycle the components that possibly form azeotropes with the reactants, or should we separate/split the azeotropes?
4. Which kind of separations can be made by distillation?
5. What is the optimal sequence of columns to be implemented?
6. How should we accomplish separations if distillation is not feasible?

Light impurities may affect the quality of the product and prevent it from reaching the commercial purity. This situation is rather common for the streams leaving the flash drum (due to the limitations associated with such a unit).

Light-ends removal

The available alternatives to remove the light ends are:

Costs

1. Decrease the pressure or increase the temperature of the stream, and remove the light ends in a phase splitter;
2. Use a partial condenser on the product column;
3. Use a pasteurization section on the product column;
4. Use a stabilizer column before the product column.

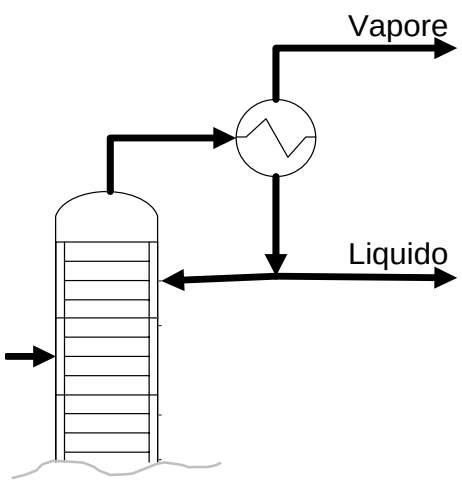

Partial condenser

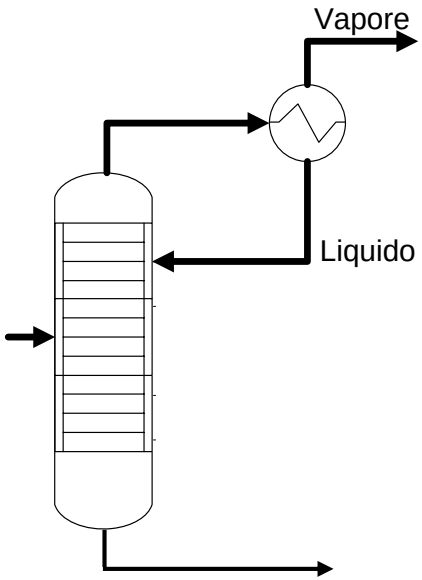

Stabilizer

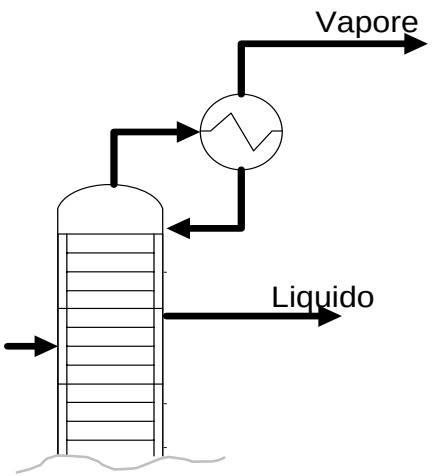

Pasteurization

Light-ends removal

- The **stabilizer** is a conventional distillation column that removes light ends. Light components often affect the quality of the final product, preventing from achieving the commercial specifications. In this case you need to remove them and the stabilizer represents an excellent alternative.
- Notice that in the stabilizer, downstream of the head condenser, the condensed liquid stream is fully recycled to the column.

Once the light ends have been separated, it is then possible to:

1. Send them to the flare;
2. Use them as fuel;
3. Send them to the vapor recovery section.

Azeotropes removal

If a component forms an azeotrope with a reactant, it is possible to either recycle the azeotrope to the reactor or split the azeotrope.
Splitting the azeotrope requires at least two columns and therefore it is expensive.
Moreover, the size of the equipment increases since the involved streams are larger.

N.B.: if the **relative volatility** of two components with neighboring boiling points is less than **1.1** distillation becomes prohibitive because of the excessive amount of reflux to be recycled to the column.
In this case, both the investment costs (column dimensions) and the operating costs (duty to the condenser) increase in an unsustainable way.
Whenever a stream is characterized by components having a relative volatility next to 1, we can group together these components and treat such a group as a single component of the mixture. We develop the best distillation sequence for this group and the other components. Finally, we separate the lumped components by means of other suitable procedures.

General criteria for separation sequence

If a stream comprises three components that must be separated, it is possible to implement two distinct approaches:

1. A / BC + B / C ➔ **DIRECT SEQUENCE**;
2. AB / C + A / B ➔ **INDIRECT SEQUENCE**.

When operating with:
- 5 components the alternatives are 14;
- 6 components the alternatives are 42.

There are specific guidelines that help selecting the most appropriate sequence:

1. Remove CORROSIVE components as soon as possible (special steel columns are much more expensive).
2. Remove REACTIVE components and MONOMERS.
3. Remove PRODUCTS and recycle streams as a DISTILLATE to avoid contamination of both product(s) and reactant(s).
4. In case of PRODUCTS and recycle streams being in the BOTTOM of the column, it is better to get them in the vapor phase and then condense them for the same reason of point 3.

Separation sequence: simple columns

Heuristics for column sequencing:

1. Most plentiful first;
2. Lightest first;
3. High-recovery separations last;
4. Difficult separations last;
5. Favor equimolar splits;
6. Next separation should be cheaper.

Notice that we try to promote a flow rate decrease in order to perform the separations that are difficult with progressively smaller quantities of material to be processed.

N.B.: these heuristics may lead to contradictions, such as:

- 1 and 5 depend on the inlet composition;
- 2 and 4 depend on relative volatilities.

Separation sequence: simple columns

Another criterion consists in selecting the sequence that minimizes the number of columns inside a recycle loop:

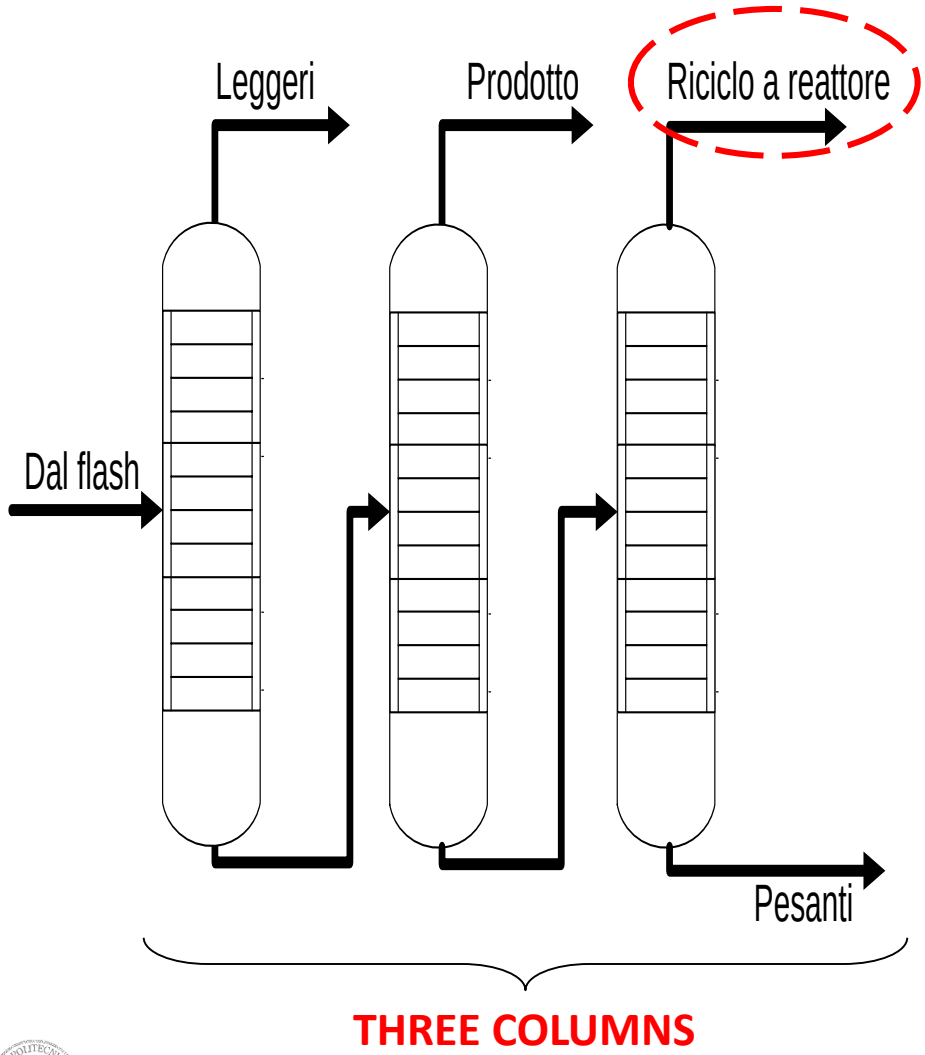

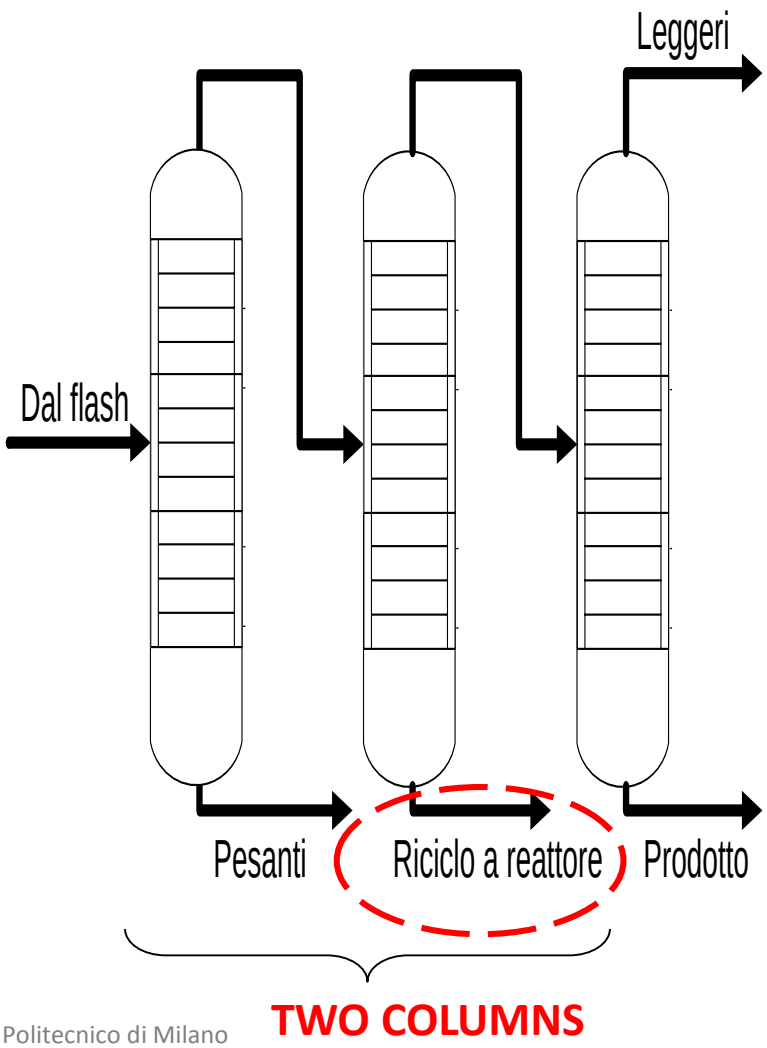

Separation sequence: complex columns

Rather than considering only sequences of simple columns (one overhead and one bottom stream) we can consider also SIDESTREAM columns, SIDESTRIPPERS, PREFRACTIONATORS, …

There are guidelines for the selection of the layout and the optimal sequence, proposed by GLINOS & MALONE, 1985 and TEDDER & RUDD 1978.

Usually, a simple column is more convenient than a complex one, but a complex column is generally cheaper than two simple columns.

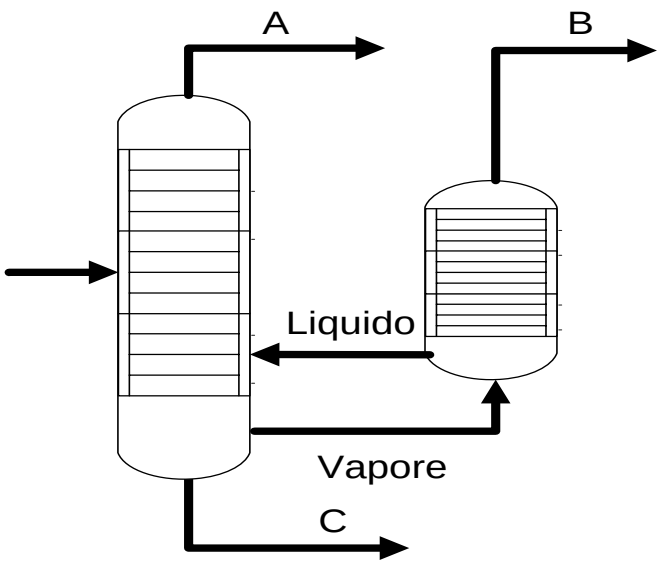

SIDE STREAM **RECTIFIER**

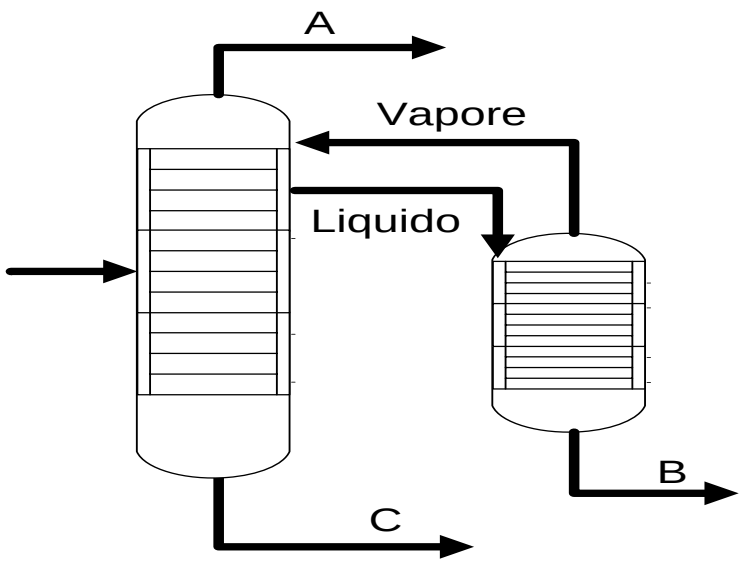

SIDE STREAM **STRIPPER**

Solvent extraction

Despite the additional cost of the solvent and of the auxiliary columns, this kind of separation allows achieving milder operating conditions and ensures lower CAPEX and OPEX terms.

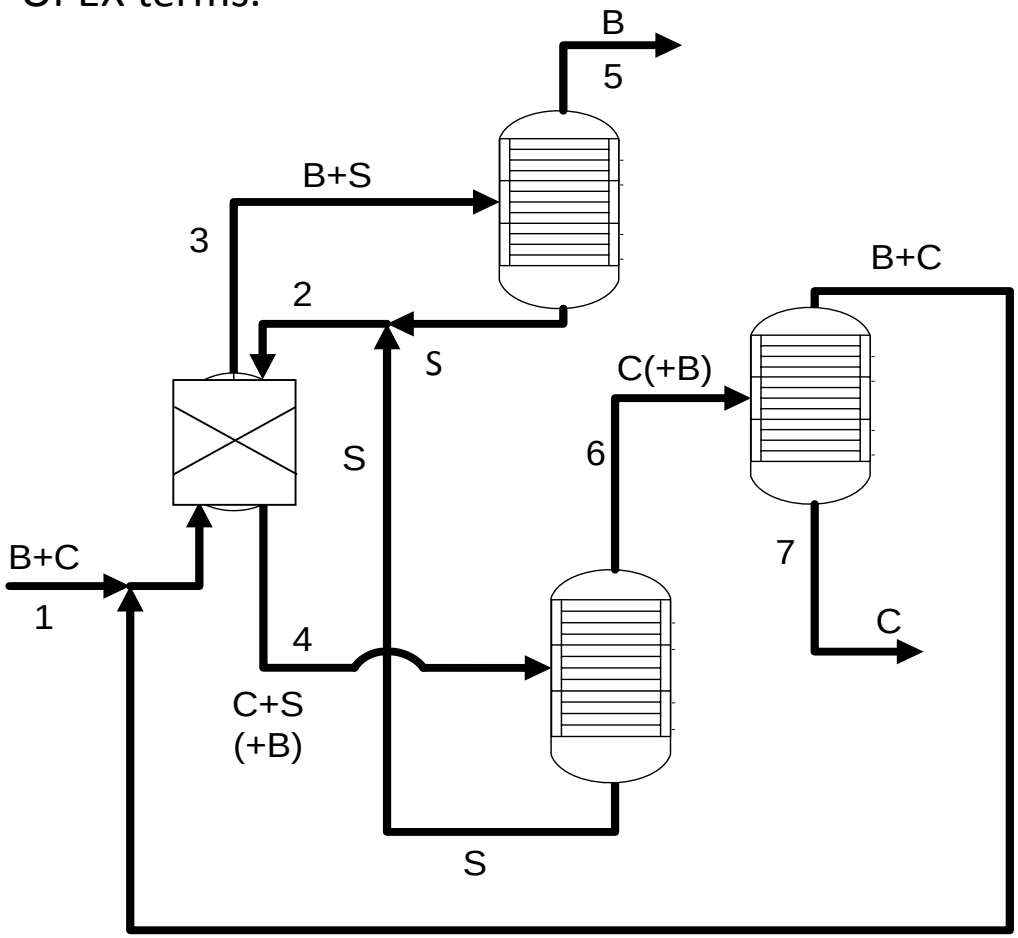

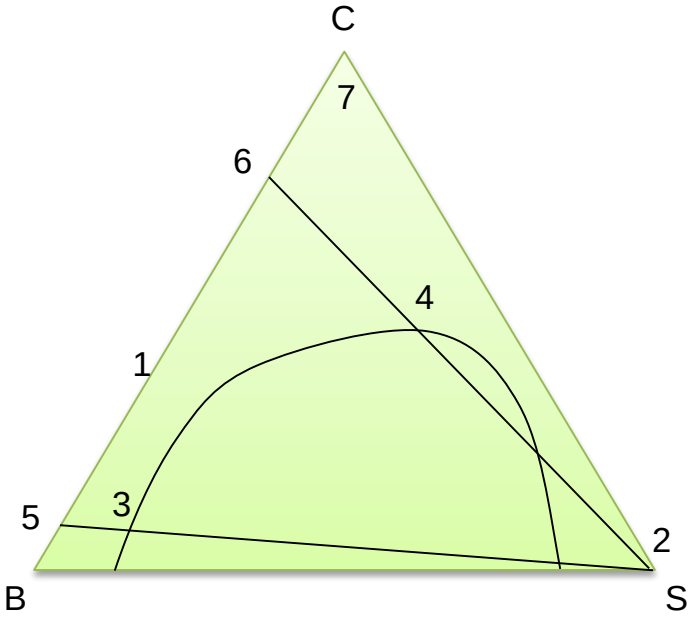

Extractive Distillation (max-boiling azeotropes)

A suitable heavy component (*i.e.* the **entrainer**) modifies the activity coefficients (γ) and therefore the vapor-liquid equilibrium.

This system is often used for maximum-boiling azeotropes.

An additional column is required to recover and recycle the entrainer.

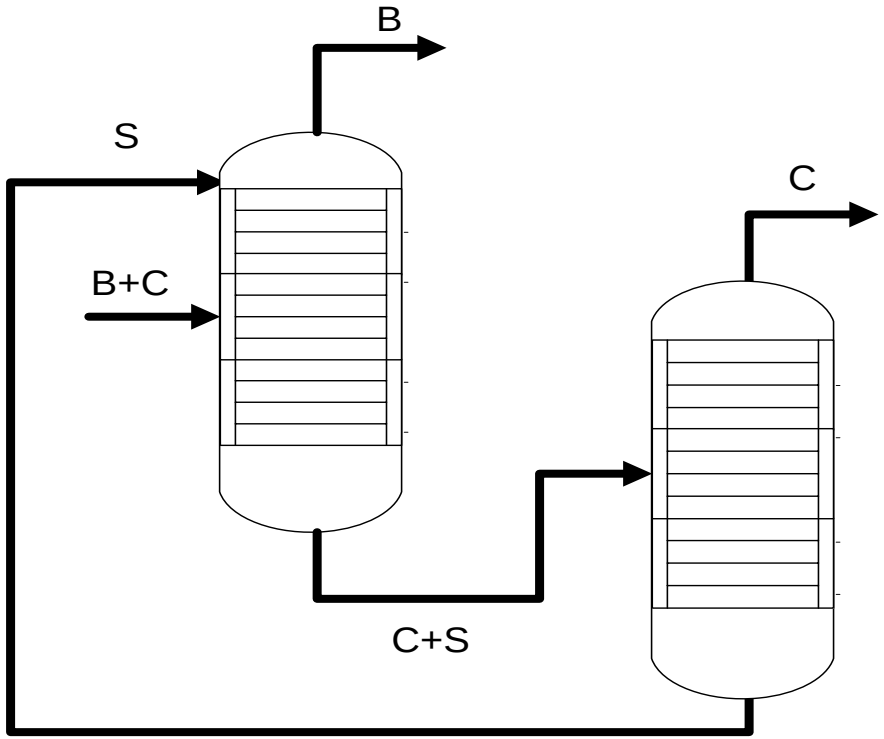

Applied example: the purification of nitric acid.

B=HNO_3

C=H_2O

S=H_2SO_4 → entrainer (added near the top of the first column)

Azeotropic distillation (min-boiling azeotropes)

We add a relatively light component (**entrainer**) that changes the vapor-liquid equilibrium.

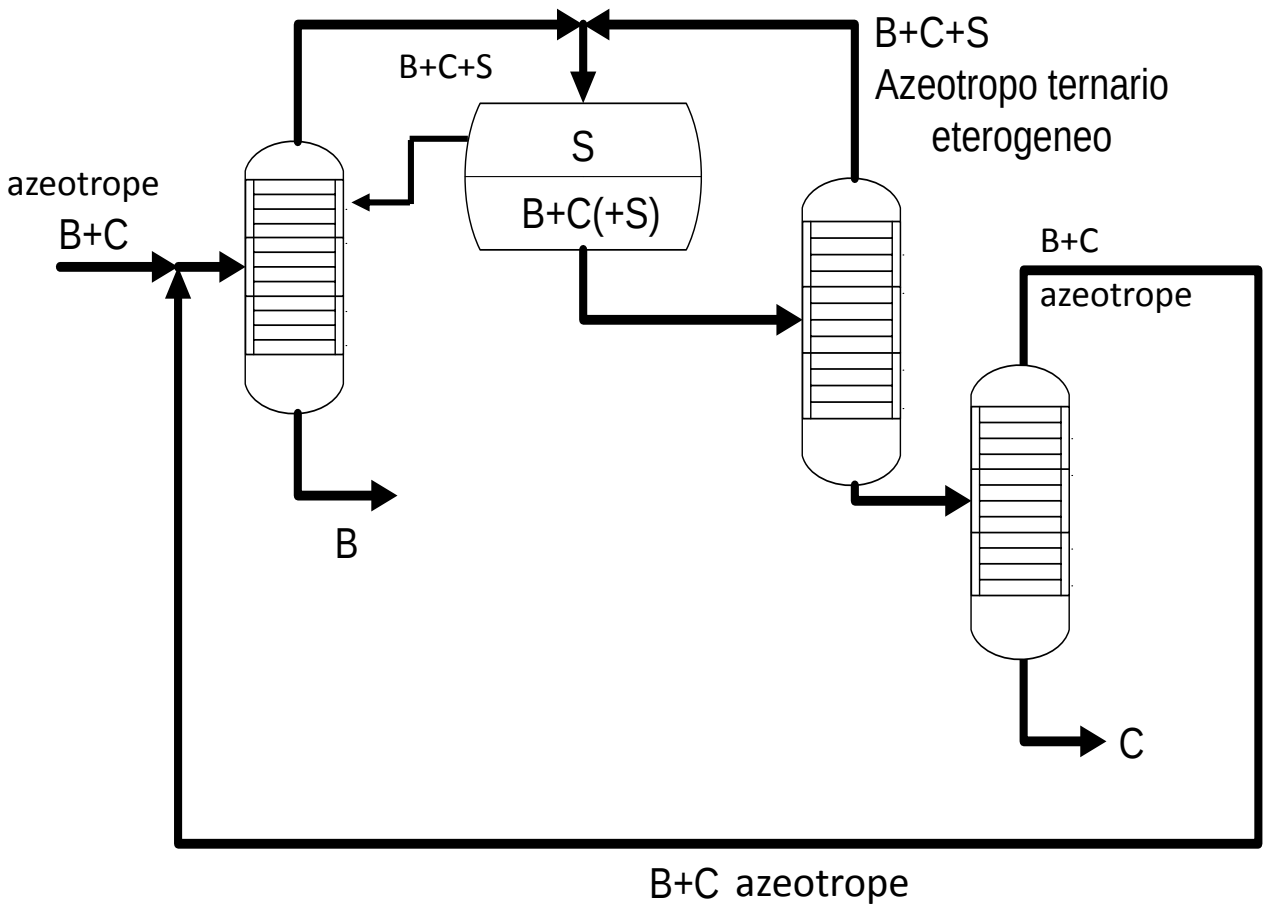

B=ethanol

C=water

S=benzene (the <u>entrainer</u> is a light component that changes the vapor-liquid equilibrium of the original mixture)

Reactive distillation

We add a component *S* that reacts with only one component in the mixture by modifying the relative volatilities α.

The reaction can be reversed in a second column and the component *S* is recycled to the first column.

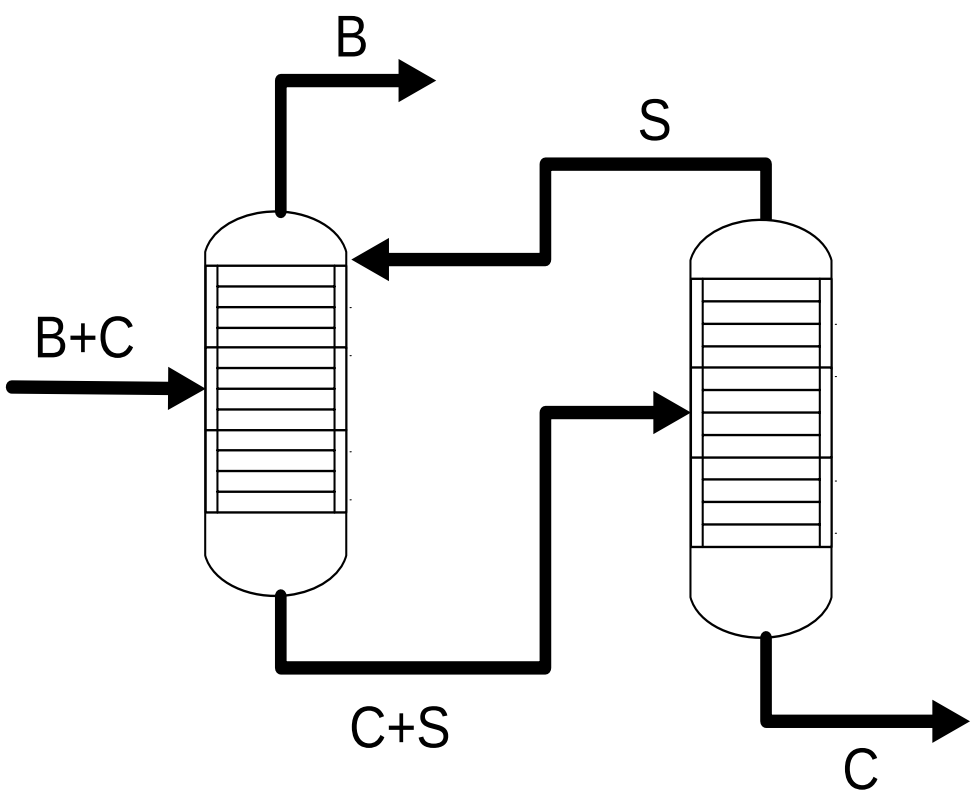

B = metaxylene

C = ortoxylene

S = sodium-cumene

(organometallic compound)

$\alpha_{B\text{-}C} = 1.03$

$\alpha_{B\text{-}(CS)} = 30$

Crystallization

We use the difference on $T_{freezing}$ between components. Such a quantity can be much greater than the corresponding difference on $T_{evaporation}$.

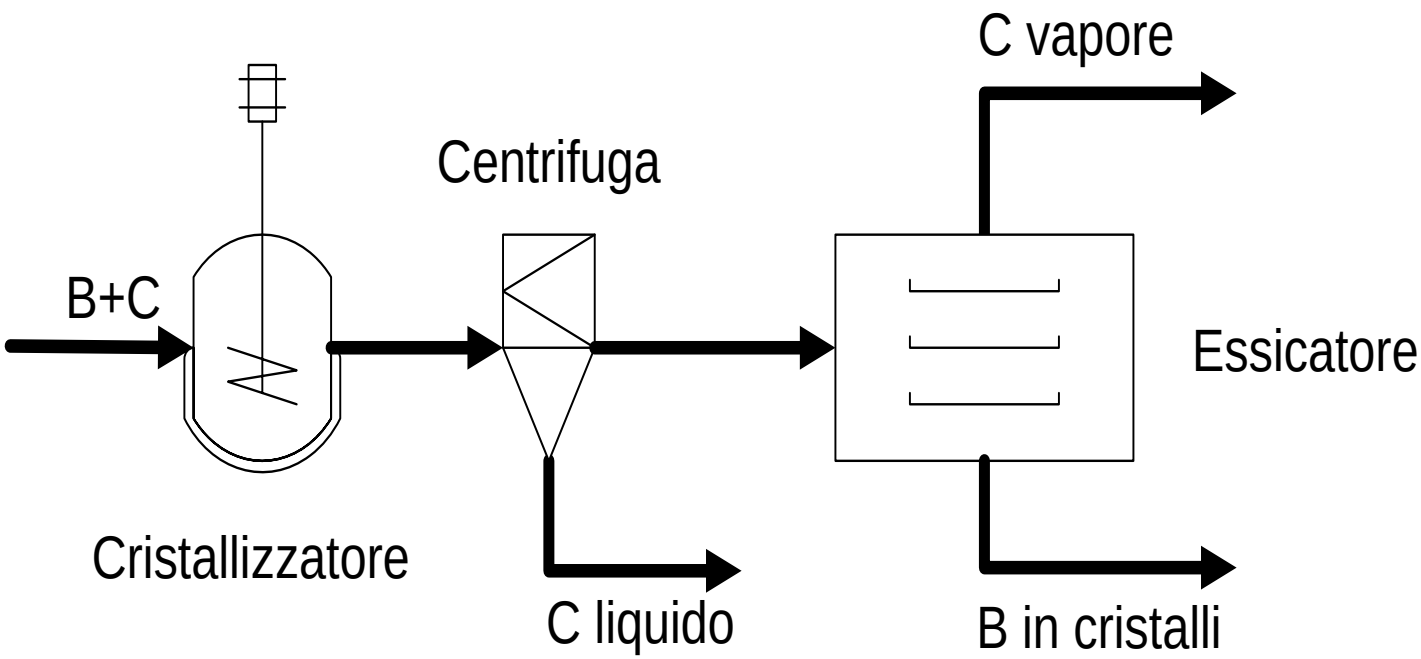

For instance, crystallization is interesting for xylene isomers.

References

- Douglas J.M., “A Hierarchical Decision Procedure for Process Synthesis”, AIChE J., 31, 353-362 (1985).
- Douglas J.M., D.C. Woodcock, “Cost Diagrams and the Quick Screening of Process Alternatives”, Ind. Eng. Chem. Process Des Dev., 24, 970-976 (1985).
- Douglas J.M., W.R. Fisher, M.F. Doherty, “Evaluating Significant Economic Trade-offs for Process Design and Steady-State Control Optimization Problems”, AIChE J., 31, 1538-1547 (1985).
- **Douglas J.M., Conceptual Design of Chemical Processes, McGraw-Hill, N.Y., (1988).**
- Kirkwood R.L., M.H. Locke, J.M. Douglas, “A Prototype Expert System for Synthesizing Process Flowsheets”, Computers & Chemical Engineering, 12, 329-343 (1988).
- Rajagopal S., K.M. Ng, J.M. Douglas, “Design of Solids Processes”, Ind. Eng. Chem. Res., 27, 2061-2078 (1988).
- Douglas J.M., “Synthesis of Multistep Reaction Processes”, Foundations of Computer-Aided Design, New York, Elsevier, 79-105 (1990).
- Douglas J.M., “Process Synthesis for Waste Minimization”, I&EC Research, 31, 238 (1992).
- Douglas J.M., “Synthesis of Separation System Flowsheets”, AIChE J., 41, 2522-36 (1995).